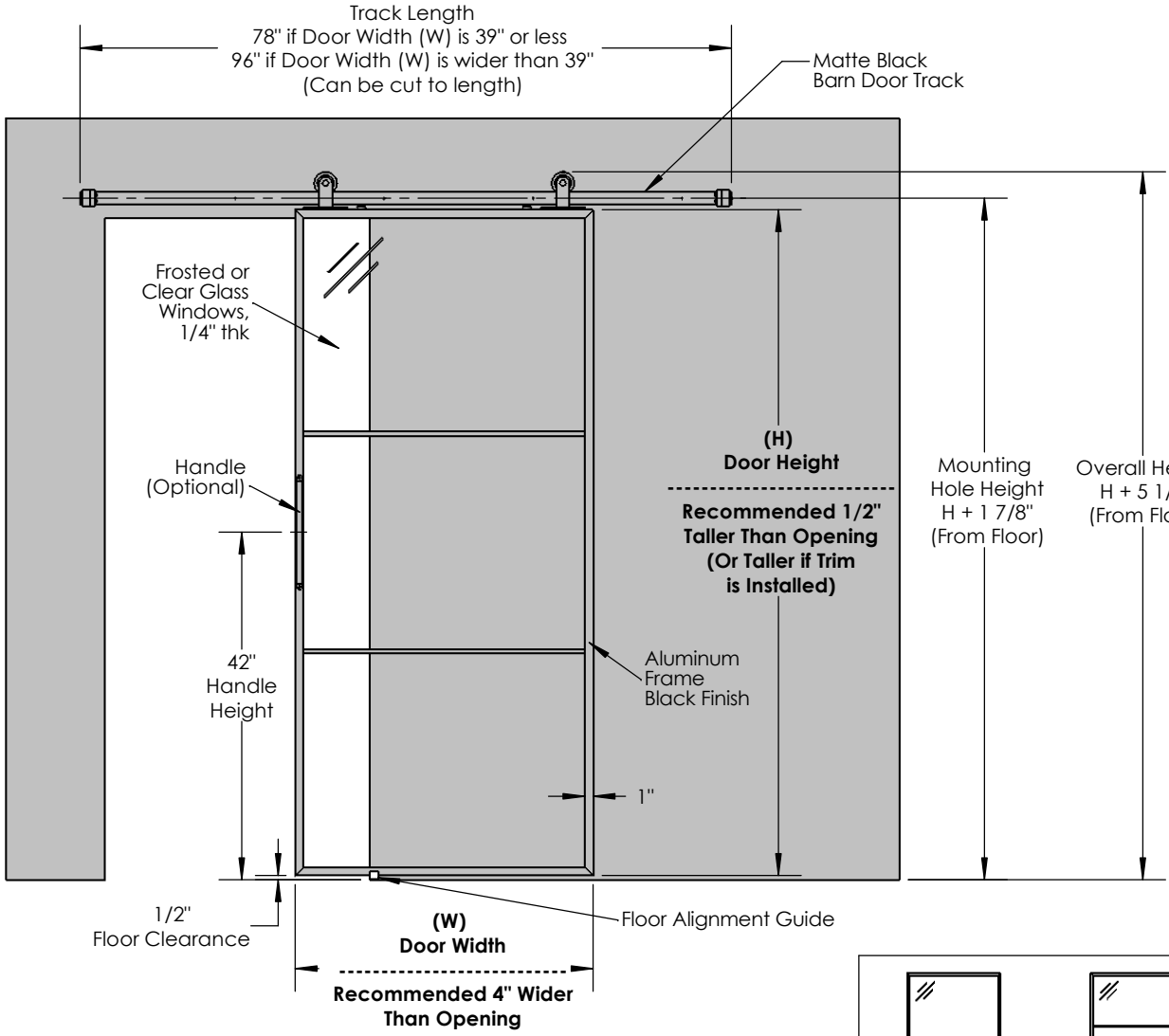

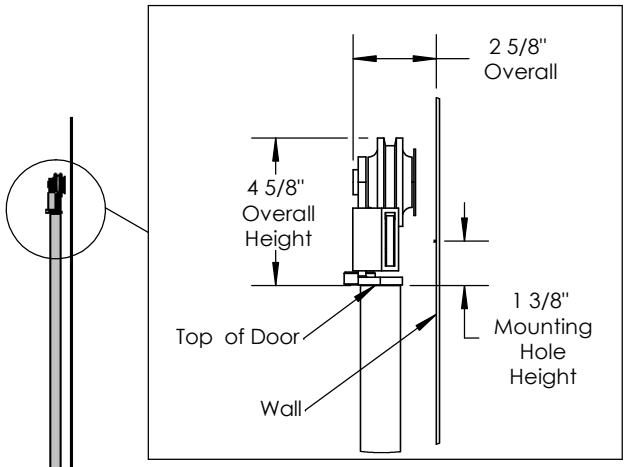

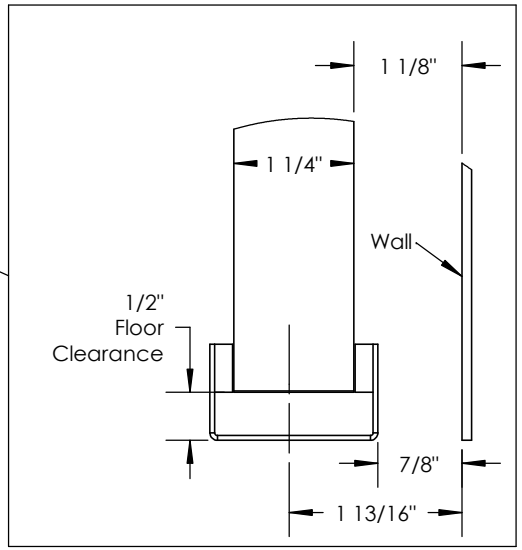

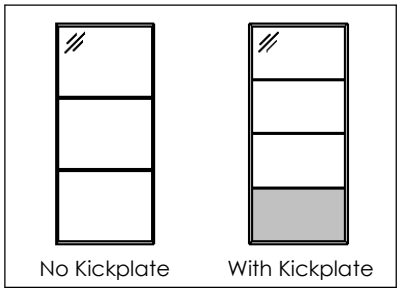

THE GLASS BARNDOOR
www.TheGlassBarnDoor.com

3 Window Black Barn Door & Track