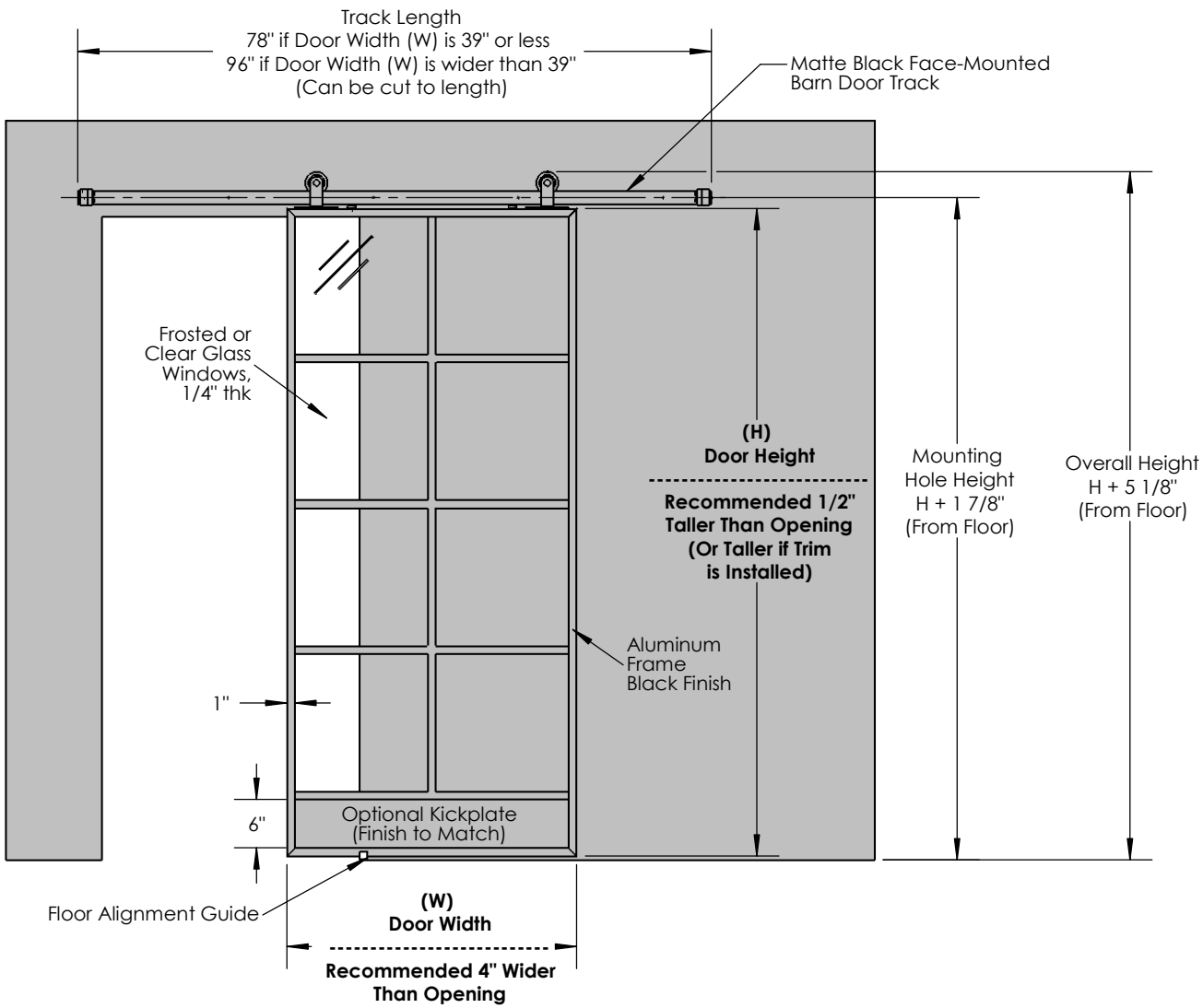

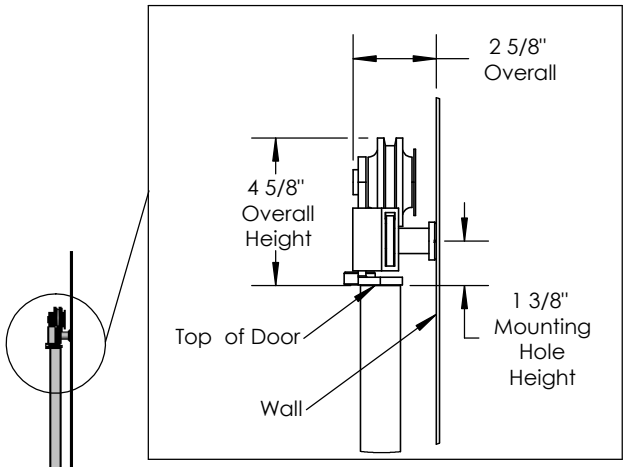

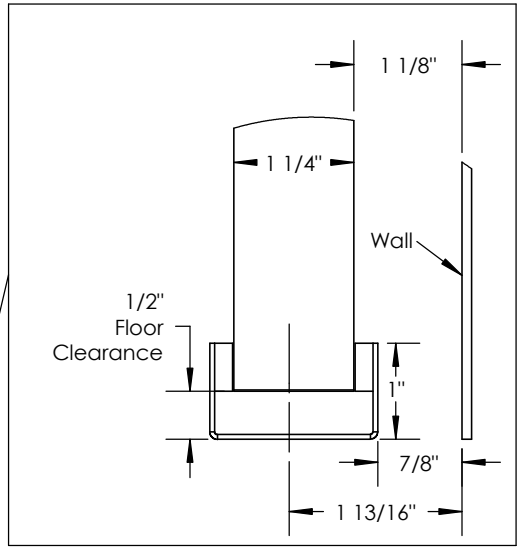

THE GLASS BARNDOOR
www.TheGlassBarnDoor.com

8 Window Black Barn Door & Track