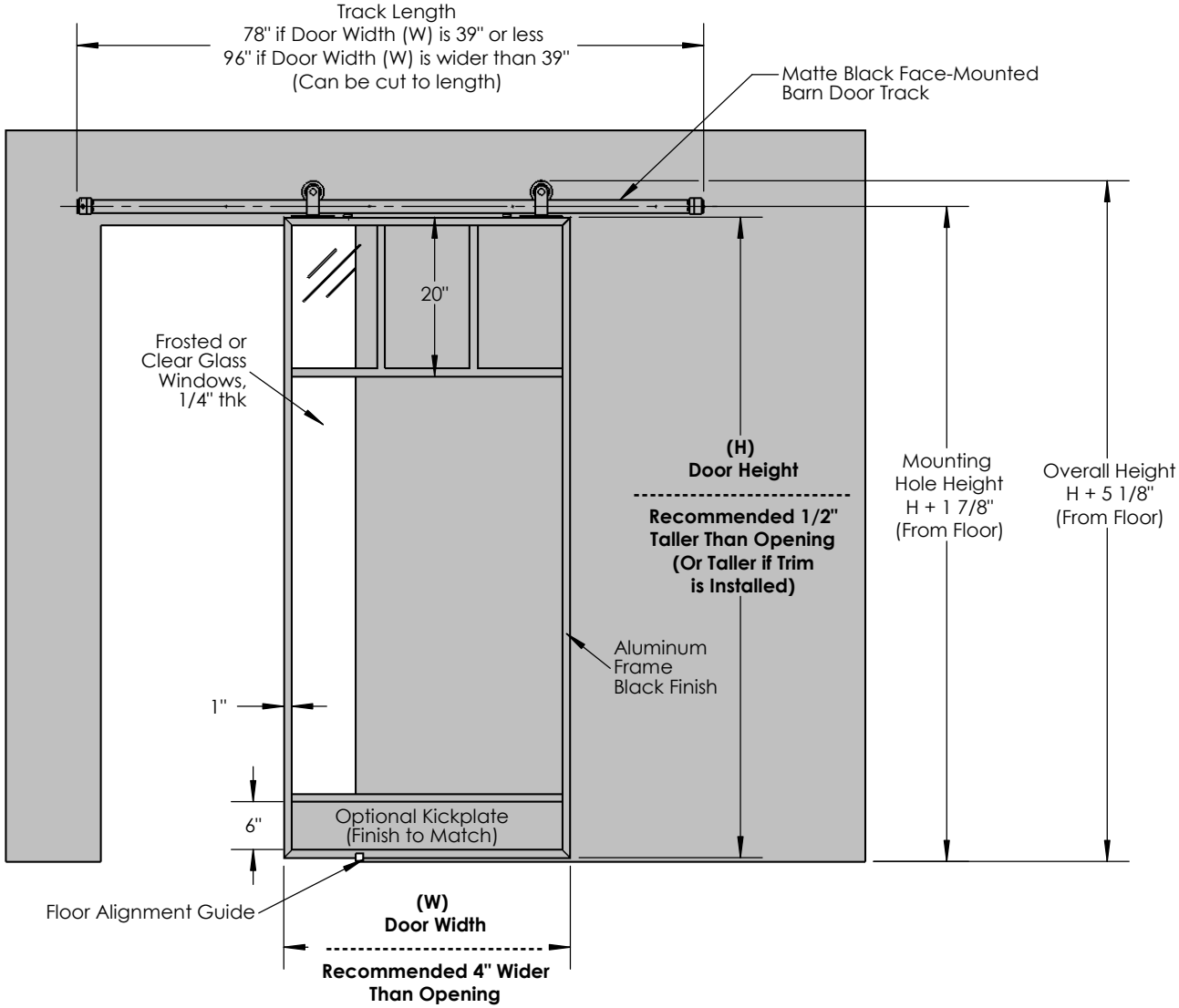

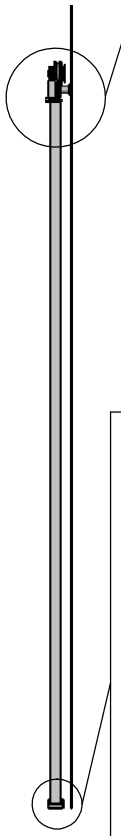

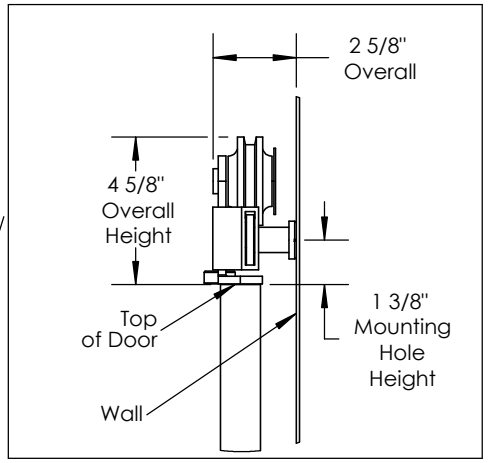

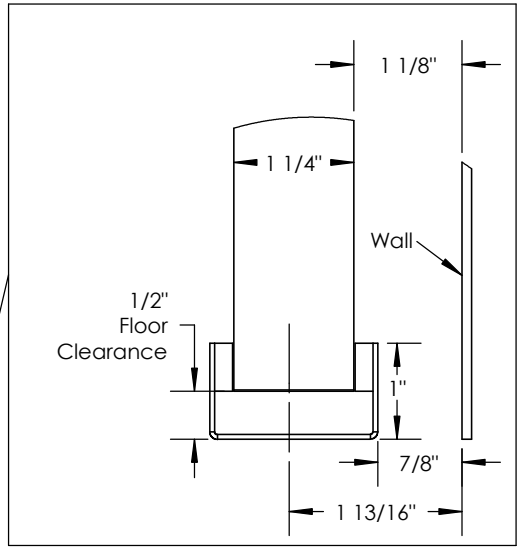

THE GLASS BARNDOOR
www.TheGlassBarnDoor.com

WindowTop Black Barn Door & Track